Q1. The figure below shows an experiment to determine the moment of inertia of a bicycle wheel. One end of a length of strong thread is attached to the tyre. The thread is wrapped around the wheel and a 0.200 kg mass is attached to the free end. The wheel is held so that the mass is at a height of 1.50 m above the floor. The wheel is released and the time taken for the mass to reach the floor is measured.

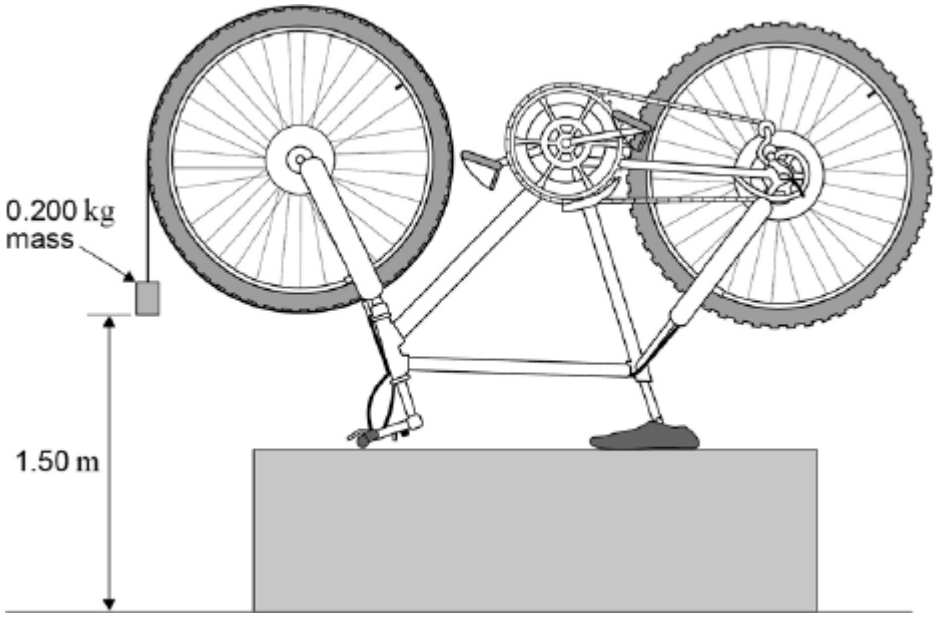

(a) State the energy transfers that take place from the moment the wheel is released until the mass hits the floor.

.....

.....

.....

.....

.....

.....

(2)

(b) Calculations based on the measurements made show that at the instant the mass hits the floor:

- the speed of the mass is 2.22 m s^{-1}
- the wheel is rotating at 6.73 rad s^{-1}
- the wheel has turned through an angle of 4.55 rad from the point of release.

A separate experiment shows that a constant frictional torque of 7.50×10^{-3} N m acts on the wheel when it is rotating.

By considering the energy changes in the system, show that the moment of inertia of the wheel about its axis is approximately 0.1 kg m^2.

(3)

(c) When the mass hits the floor the thread is released from the wheel.

Calculate the angle turned through by the wheel before it comes to rest after the thread is released.

angle = ... rad

(2)
(Total 7 marks)

Q2. The following figure shows a motor-driven winch for raising loads on a building site. As the motor turns the cable is wound around the drum, raising the load.

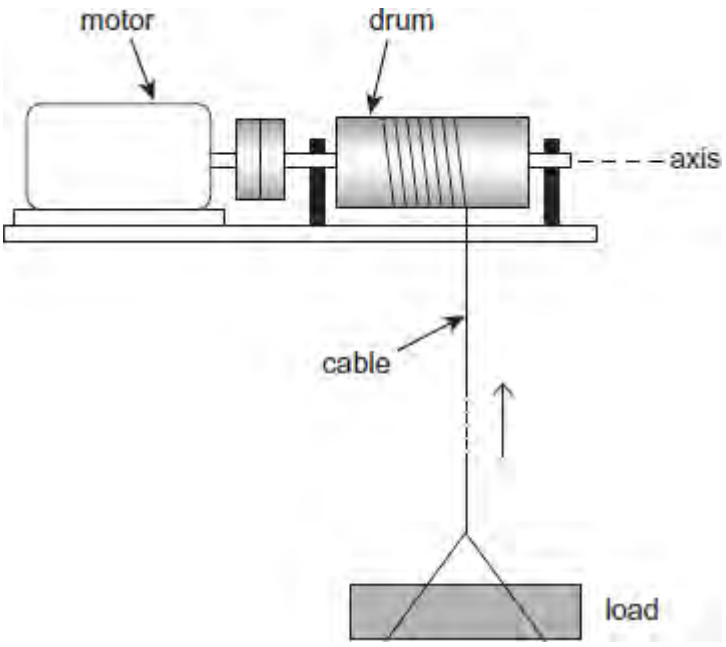

The drum, axle and other rotating parts have a moment of inertia about the axis of rotation of 7.4 kg m^2, and the mass of the load is 85 kg. The drum has a radius of 0.088 m.

The load is accelerated uniformly from rest to a speed of 2.2 m s^{-1}. When it is accelerating it rises through a height of 3.5 m. It then continues at the constant speed of 2.2 m s^{-1}.

(a) Show that the drum turns through 40 rad as the load accelerates.

(1)

(b) Calculate the angular speed of the drum when the load is moving at 2.2 m s^{-1}.

angular speed ..... rad s^{-1}

(1)

(c) (i) Show that for the time that the load is accelerating the total increase in energy of the load and the rotating parts is about 5400 J.

(3)

(ii) A constant frictional torque of 5.2 N m acts at the bearings of the winch.

Calculate the total work done by the motor to accelerate the load.

Give your answer to an appropriate number of significant figures.

total work done ..... J

(3)

(d) Calculate the **maximum** power developed by the motor.

maximum power ..... W

(2)

(Total 10 marks)

Q3. The turntable of a microwave oven has a moment of inertia of 8.2×10^{-3} kg m^2 about its vertical axis of rotation.

(a) With the drive disconnected, the turntable is set spinning. Starting at an angular speed of 6.4 rad s^{-1} it makes 8.3 revolutions before coming to rest.

(i) Calculate the angular deceleration of the turntable, assuming that the deceleration is uniform. State an appropriate unit for your answer.

angular deceleration ..... unit .....

(4)

(ii) Calculate the magnitude of the frictional torque acting at the turntable bearings.

torque ..... N m

(1)

(b) The turntable drive is reconnected. A circular pie is placed centrally on the turntable. The power input to the microwave oven is 900 W, and to cook the pie the oven is switched on for 270 seconds. The turntable reaches its operating speed of 0.78 rad s^{-1} almost immediately, and the friction torque is the same as in part (a)(ii).

(i) Calculate the work done to keep the turntable rotating for 270 s at a constant angular speed of 0.78 rad s^{-1} as the pie cooks.

work done ..... J

(2)

(ii) Show that the ratio

$$\frac{\text{energy supplied to oven}}{\text{work done to drive turntable}}$$

is of the order of 10^5.

(2)

(Total 9 marks)

Q4. A grinding wheel is used to sharpen chisels in a school workshop. A chisel is forced against the edge of the grinding wheel so that the tangential force on the wheel is a steady 7.0 N as the wheel rotates at 120 rad s^{-1}. The diameter of the grinding wheel is 0.15 m.

(a) (i) Calculate the torque on the grinding wheel, giving an appropriate unit.

answer = ...

(2)

(ii) Calculate the power required to keep the wheel rotating at 120 rad s^{-1}.

answer = ... W

(1)

(b) When the chisel is removed and the motor is switched off, it takes 6.2 s for the grinding wheel to come to rest.

Calculate the number of rotations the grinding wheel makes in this time.

answer = ...

(2)
(Total 5 marks)