Q1.Figure 1 shows a narrow beam of electrons produced by attracting the electrons emitted from a filament wire, to a positively charged metal plate which has a small hole in it.

Figure 1

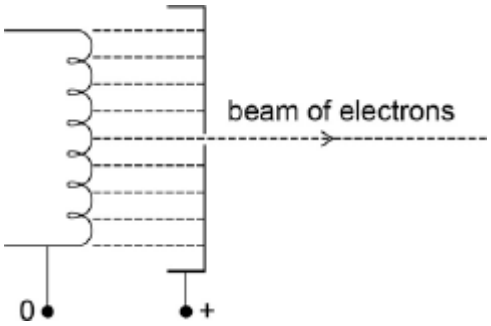

(a) Explain why an electric current through the filament wire causes the wire to emit electrons.

.....

.....

.....

(2)

(b) Explain why the filament wire and the metal plates must be in an evacuated tube.

.....

.....

.....

(1)

(c) The potential difference between the filament wire and the metal plate is 4800 V.

Calculate the de Broglie wavelength of the electrons in the beam.

wavelength = ... m

(4)

The beam is directed at a thin metal foil between the metal plate and a fluorescent screen at the end of the tube, as shown in **Figure 2**.
The electrons that pass through the metal foil cause a pattern of concentric rings on the screen.

Figure 2

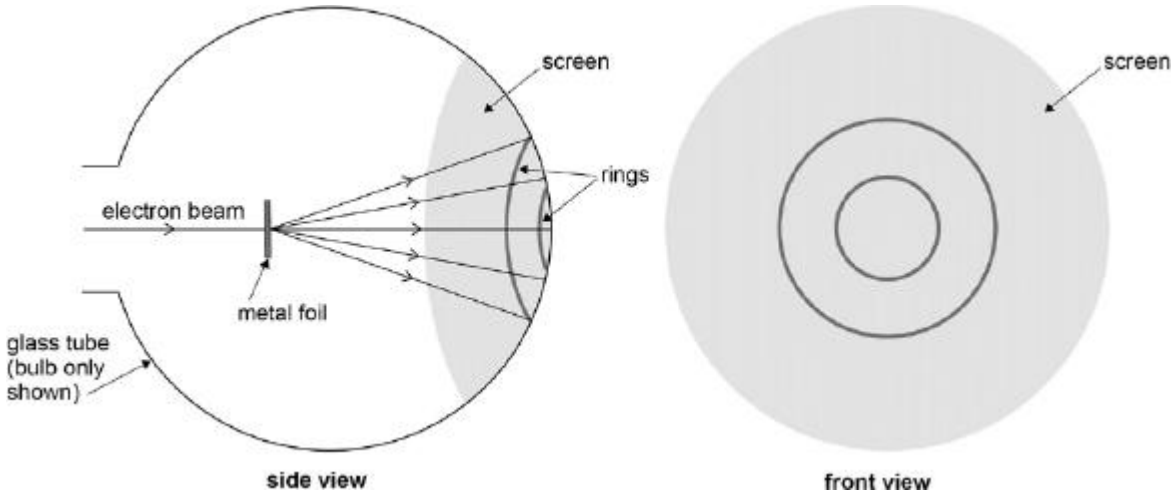

(d) The potential difference between the filament and the metal plate is increased.
State and explain the effect this has on the diameter of the rings.

.....

.....

.....

.....

.....

.....

(3)
(Total 10 marks)

Q2.(a) State de Broglie's hypothesis.

.....

.....

.....

(2)

(b) Neutrons in a narrow beam can be diffracted by crystals thereby exhibiting wave behaviour. Calculate the de Broglie wavelength of a neutron of kinetic energy 0.021 eV. Give your answer to an appropriate number of significant figures.

de Broglie wavelength ..... m

(4)

(c) Explain why an electron of the same de Broglie wavelength as the neutron in part (b) has much more kinetic energy than 0.021 eV. Assume relativistic effects are negligible.

.....

.....

.....

.....

.....

(2)
(Total 8 marks)

Q3. (a) Light has a dual wave-particle nature. State and outline a piece of evidence for the wave nature of light and a piece of evidence for its particle nature. For each piece of evidence, outline a characteristic feature that has been observed or measured and give a short explanation of its relevance to your answer. Details of experiments are not required.

The quality of your written communication will be assessed in your answer.

.....

.....

.....

.....

.....

.....

.....

.....

.....

.....

.....

.....

(6)

(b) An electron is travelling at a speed of 0.890 *c* where *c* is the speed of light in free space.

(i) Show that the electron has a de Broglie wavelength of 1.24×10^{-12} m.

(2)

(ii) Calculate the energy of a photon of wavelength 1.24×10^{-12} m.

answer = ... J

(1)

(iii) Calculate the kinetic energy of an electron with a de Broglie wavelength of 1.24×10^{-12} m.
Give your answer to an appropriate number of significant figures.

answer = ... J

(2)

(Total 11 marks)