AQA

Please write clearly in block capitals.

Centre number | | | | | | Candidate number | | | | |

Surname _____

Forename(s) _____

Candidate signature _____
I declare this is my own work.

AS
PHYSICS

Paper 1

Wednesday 15 May 2024 Morning Time allowed: 1 hour 30 minutes

Materials
For this paper you must have:
- a pencil and a ruler
- a scientific calculator
- a Data and Formulae Booklet
- a protractor.

Instructions
- Use black ink or black ball-point pen.
- Fill in the boxes at the top of this page.
- Answer **all** questions.
- You must answer the questions in the spaces provided. Do not write outside the box around each page or on blank pages.
- If you need extra space for your answer(s), use the lined pages at the end of this book. Write the question number against your answer(s).
- Do all rough work in this book. Cross through any work you do not want to be marked.
- Show all your working.

Information
- The marks for questions are shown in brackets.
- The maximum mark for this paper is 70.
- You are expected to use a scientific calculator where appropriate.
- A Data and Formulae Booklet is provided as a loose insert.

For Examiner's Use	
Question	Mark
1	
2	
3	
4	
5	
6	
TOTAL	

Do not write outside the box

Answer **all** questions in the spaces provided.

0 1 An electron neutrino interacts with a chlorine-37 nucleus to produce an argon-37 nucleus and an electron.

The interaction is represented by the equation:

$$\nu_e + {}^{37}_{17}\mathrm{Cl} \rightarrow {}^{37}_{18}\mathrm{Ar} + \mathrm{e}$$

0 1 . 1 Explain, with reference to appropriate conservation laws, why the electron is emitted in this interaction.

[2 marks]

_____

_____

_____

_____

_____

_____

0 1 . 2 Calculate the specific charge of the argon-37 nucleus.

[2 marks]

specific charge = _____ $\mathrm{C\ kg^{-1}}$

Do not write outside the box

0 1 . 3 In a different interaction, the argon-37 nucleus interacts with an electron.

Figure 1 represents the interaction of a quark in a baryon of the nucleus.

Figure 1

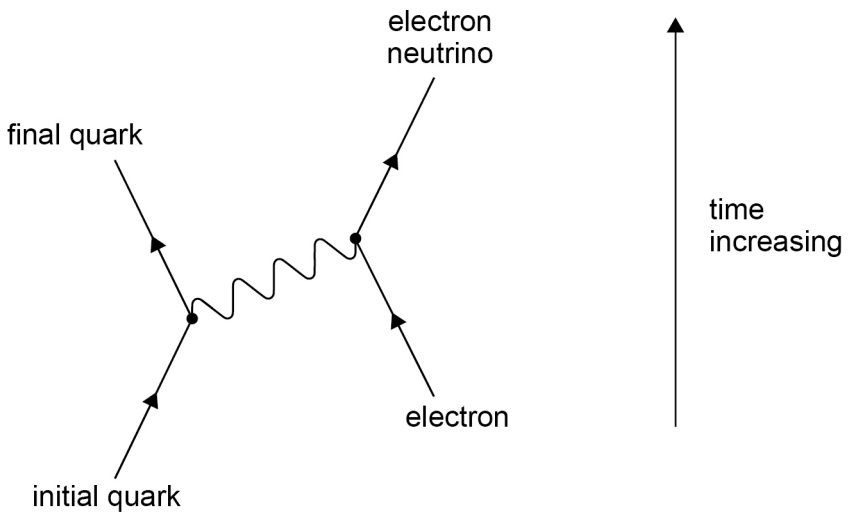

Deduce the exchange particle and the effect on the baryon.
Give **one** reason to support each answer.

[4 marks]

exchange particle _____

reason _____

_____

_____

_____

_____

effect on baryon _____

_____

reason _____

_____

_____

_____

Question 1 continues on the next page

Do not write outside the box

0 1 . 4 The argon-37 nucleus decays into a stable nucleus.

Describe the nature of the forces that act between nucleons and how these forces can maintain nuclear stability.

In your answer, describe:

- the forces of repulsion and attraction that act between nucleons
- exchange particles associated with these forces
- the role of these forces in keeping the nucleus stable.

[6 marks]

Do not write outside the box

14

Do not write outside the box

0 2 A tube contains a vapour of mercury atoms at low pressure. In an experiment, the vapour is bombarded by a beam of electrons.

An electron in the beam gains $6.7\ \mathrm{eV}$ of kinetic energy by moving through a potential difference V.

0 2 . 1 Deduce V.

[1 mark]

$V =$ _____ V

The electron collides with a mercury atom. The atom subsequently emits a photon of ultraviolet radiation with an energy of $6.7\ \mathrm{eV}$.

0 2 . 2 Calculate the wavelength of the emitted photon of this ultraviolet radiation.

[3 marks]

wavelength = _____ m

Do not write outside the box

0 2 . 3 The experiment is repeated with a different gas.
Figure 2 shows the three lowest energy levels for an atom of the gas.

Figure 2

not to scale

-3.16 eV	_____	energy level **B**
-4.96 eV	_____	energy level **A**
-21.56 eV	_____	ground state

When an electron in the beam collides with the gas atom, 18.4 eV of energy is transferred to the atom.
The atom subsequently emits a photon of visible light.

State and explain the energy transitions that are involved.
Support your answer with appropriate calculations.

[4 marks]

_____

_____

_____

_____

_____

_____

_____

8

Turn over ►

Do not write outside the box

There are no questions printed on this page

DO NOT WRITE ON THIS PAGE
ANSWER IN THE SPACES PROVIDED

Do not write outside the box

0 3 **Figure 3** shows a guitar with only one of its strings attached.
The string is fixed at **X** and **Y**.
The string is plucked and vibrates freely between **X** and **Y**.
The distance **XY** is 648 mm.

Figure 3

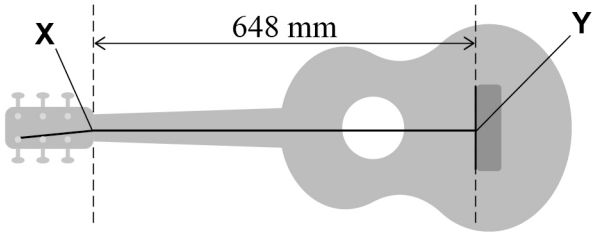

0 3 . 1 The frequency of the first harmonic is 147 Hz.

Calculate the speed of the wave travelling in the string.

[2 marks]

speed of wave = _____ m s^{-1}

0 3 . 2 The tension in the string is 71 N.

Calculate the mass of the string between **X** and **Y**.

[3 marks]

mass = _____ kg

Question 3 continues on the next page

Do not write outside the box

The sound produced by the guitar is analysed.

The sound is the superposition of the first harmonic f_1 with harmonics f_2, f_3, f_4 and f_5 of the stationary waves that exist on the string.

Figure 4 shows the frequencies of these harmonics and their relative amplitudes.

Figure 4

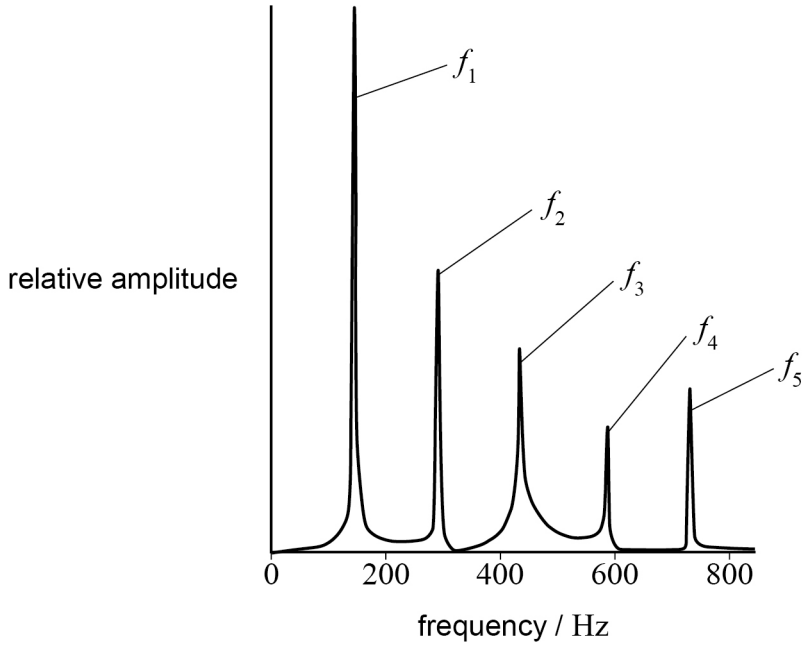

0 3 . 3 Draw, on **Figure 5**, the stationary wave that produces the harmonic f_3.

Label the positions of all nodes **N** and all antinodes **A**.

[3 marks]

Figure 5

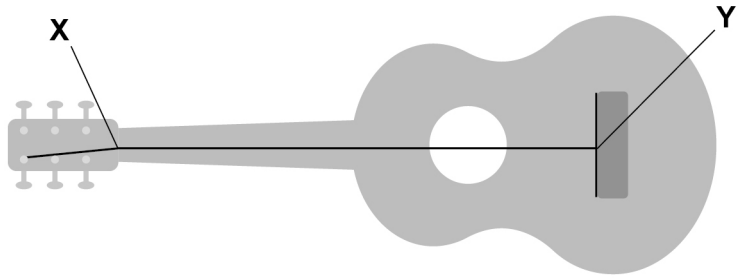

Do not write outside the box

0 3 . 4 The string is vibrating freely.
The player then touches the string lightly at its midpoint **Z** as shown in **Figure 6**. This prevents the string from vibrating at **Z**.

The sections **XZ** and **ZY** of the string continue to vibrate.

Figure 6

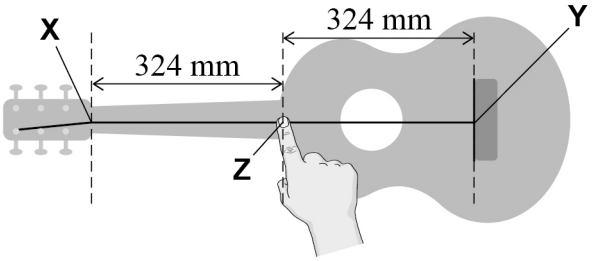

The sound produced by the guitar is analysed.

Deduce, with reference to frequency, how the harmonics present in this sound compare with the harmonics present in **Figure 4**.

[3 marks]

11

Turn over for the next question

Do not write outside the box

0 4 In this question, assume that all forces are coplanar.

0 4 . 1 **Figure 7** shows a car and trailer moving at $25\ \mathrm{m\ s^{-1}}$ at a distance s from traffic lights.

Figure 7

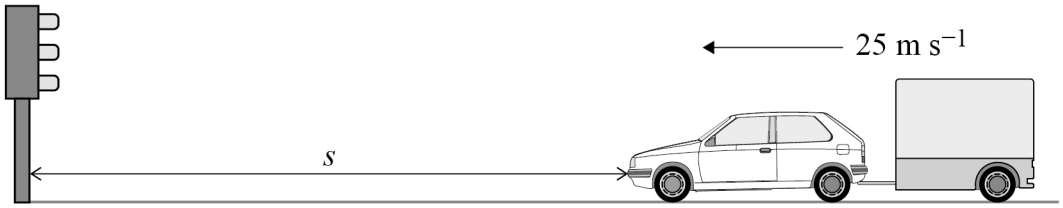

The driver applies the brakes so that the car and trailer stop at the lights.

The car and trailer undergo a constant deceleration of $2.8\ \mathrm{m\ s^{-2}}$.

Calculate s.

[2 marks]

$s =$ _____ m

Do not write outside the box

The car and trailer accelerate from rest along a horizontal road.

Figure 8 shows:

- that the car exerts a horizontal force P_H on the trailer
- that the trailer has a weight of $2500\ \mathrm{N}$
- the reaction force R on the wheels of the trailer.

Figure 8

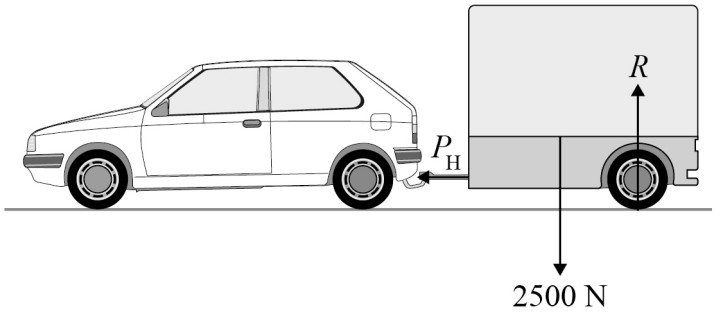

0 4 . 2 Initially, there are no resistive forces and the trailer accelerates at $1.5\ \mathrm{m\ s^{-2}}$.

Calculate the initial value of P_H.

[2 marks]

$P_H =$ _____ N

Question 4 continues on the next page

Do not write outside the box

Air resistance D acts on the trailer when it is moving. D increases as the velocity v of the trailer increases.

Figure 9 shows how D varies with v.

Figure 9

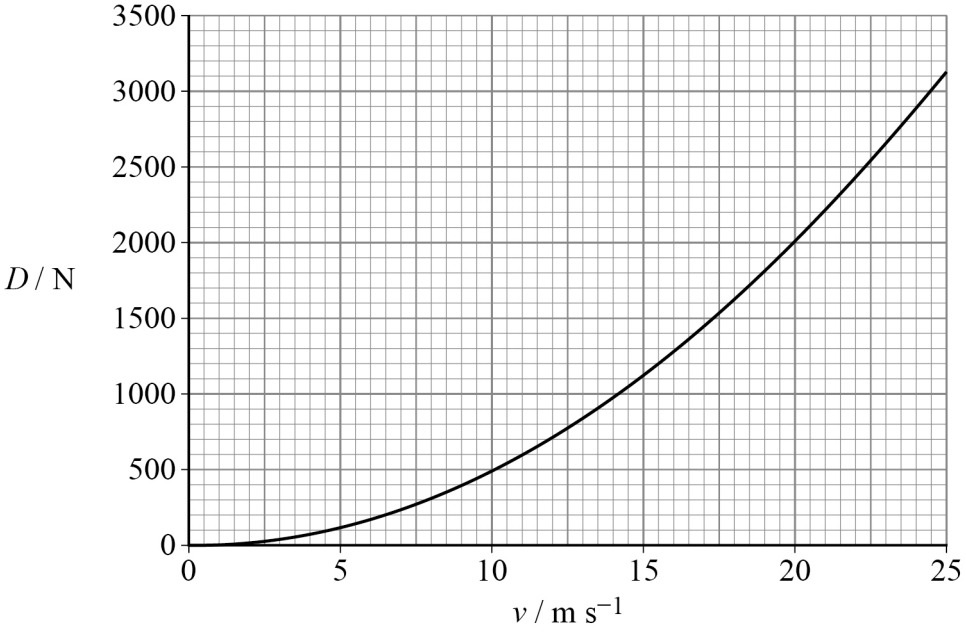

Figure 10 shows the forces acting on the trailer when it is travelling at a constant horizontal velocity.
The car exerts a vertical force P_V and a horizontal force P_H on the trailer when it is travelling at a constant horizontal velocity v_1.
An enlarged view of P_V and P_H is also shown in **Figure 10**.

Figure 10

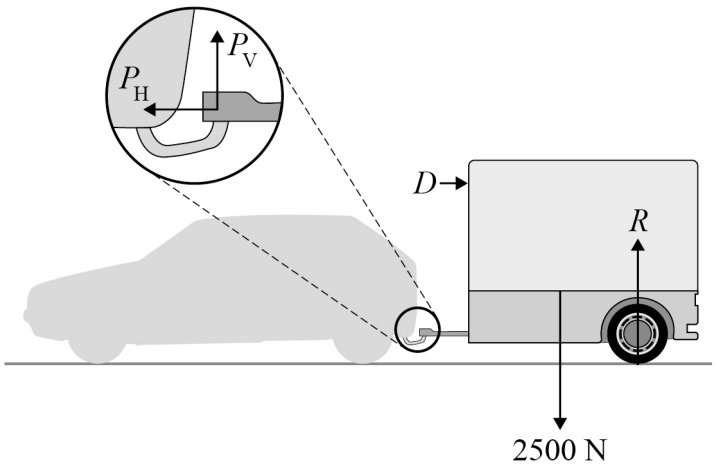

The horizontal force P_H is now greater than the value calculated in Question **04.2**.

Do not write outside the box

0 4 . 3 The vertical force P_V is 762 N.
The resultant of P_H and P_V is 912 N.

Determine v_1.

[3 marks]

v_1 = _____ m s^{-1}

D can be considered to act at the position shown in **Figure 11**. For some of the forces, the distances of their lines of action from the centre of the trailer's wheel have been included.

Figure 11

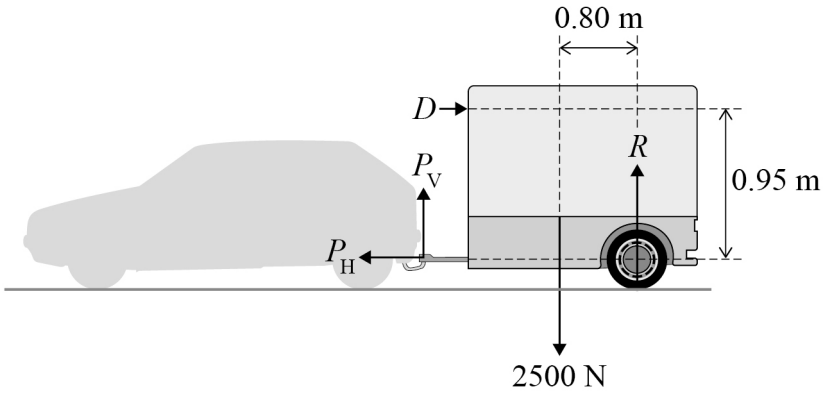

0 4 . 4 Explain why P_H has no moment about the centre of the trailer's wheel in **Figure 11**.

[1 mark]

_____

_____

_____

Question 4 continues on the next page

Do not write outside the box

0 4 . 5 When the car and trailer travel with velocity v_2, P_V is zero.

Determine v_2.

[3 marks]

v_2 = _____ m s^{-1}

0 4 . 6 The air resistance D acting on the trailer increases as the velocity v of the trailer increases.

Explain this increase in D with reference to the momentum of the air displaced by the trailer.
You should also refer to appropriate Newton's laws of motion.

[3 marks]

Do not write outside the box

0 4 . 7 The car has a maximum power output of 95 kW.

The maximum velocity of the car and trailer is $25\ \mathrm{m\ s^{-1}}$.
At this velocity, the force D on the trailer is 3100 N.

The car exerts a horizontal force P_H on the trailer and the trailer exerts an equal and opposite force of magnitude P_H on the car.
Assume that air resistance and P_H are the only resistive forces acting on the car.

Calculate the air resistance acting on the car when it is travelling at a constant velocity of $25\ \mathrm{m\ s^{-1}}$.

[3 marks]

air resistance on car = _____ N

17

Turn over for the next question

Do not write outside the box

0 5 **Figure 12** shows a circuit for controlling the current I in a filament lamp $\mathbf{L_1}$.

The battery has negligible internal resistance.

Figure 12

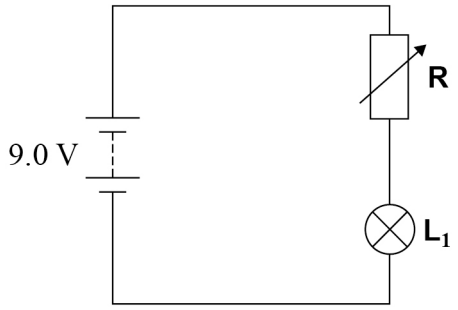

Figure 13 shows how the resistance of $\mathbf{L_1}$ varies with I.

Figure 13

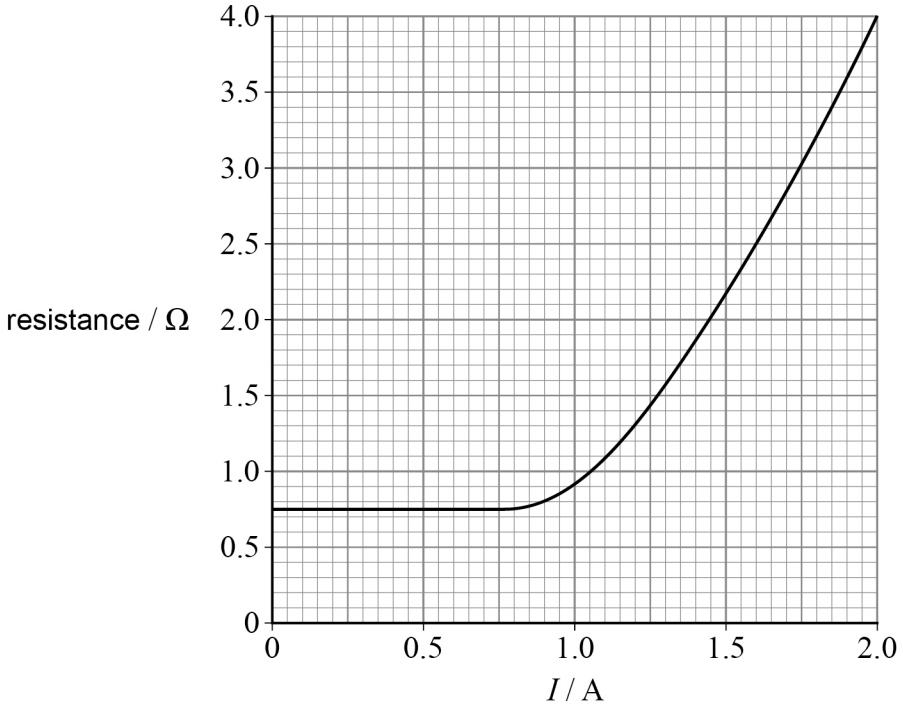

Do not write outside the box

0 5 . 1 The current in $\mathbf{L_1}$ is increased from 0 to 0.50 A.
The potential difference V across $\mathbf{L_1}$ is 0.375 V when I is 0.50 A.

Draw, on **Figure 14**, a V–I graph for $\mathbf{L_1}$ in the current range 0 to 0.50 A.

[1 mark]

Figure 14

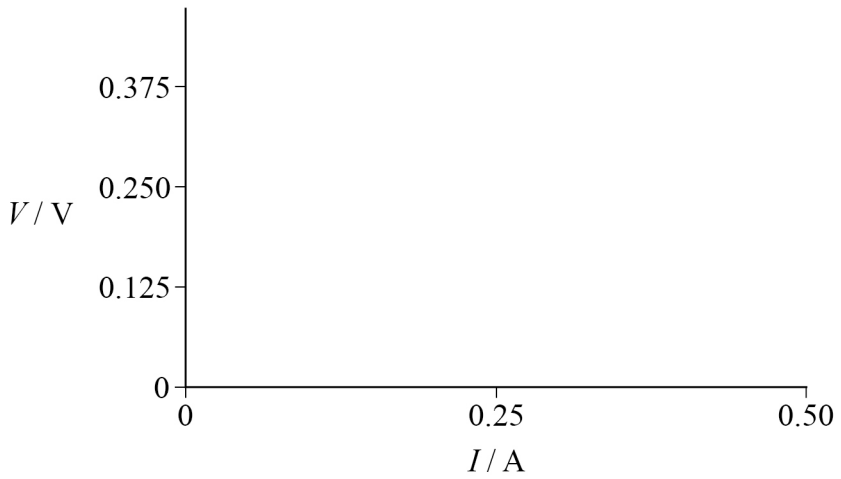

0 5 . 2 Calculate the power dissipated in $\mathbf{L_1}$ when I is 1.9 A.

[2 marks]

power dissipated = _____ W

Question 5 continues on page 21

Do not write outside the box

There are no questions printed on this page

DO NOT WRITE ON THIS PAGE
ANSWER IN THE SPACES PROVIDED

Do not write outside the box

0 5 . 3 The variable resistor **R** in **Figure 12** is adjusted until I is 1.5 A and V is 3.3 V.

Calculate the resistance of **R**.

[2 marks]

resistance of **R** = _____ Ω

0 5 . 4 **Figure 15** shows a second lamp $\mathbf{L_2}$, identical to $\mathbf{L_1}$, connected to the circuit.

Figure 15

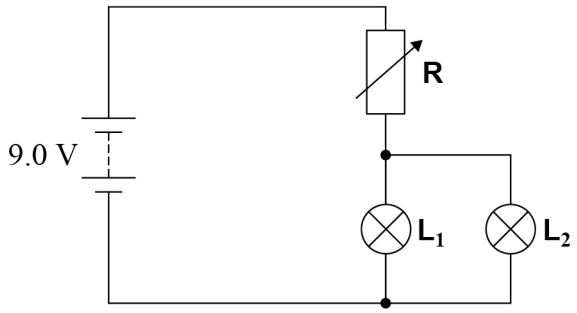

R is adjusted so that the potential difference across $\mathbf{L_1}$ is again 3.3 V.

Deduce, without calculation, the change in the resistance of **R**.

[3 marks]

_____

_____

_____

_____

_____

_____

_____

_____

_____

8

Turn over ►

Do not write outside the box

0 6 **Figure 16** shows a boy of mass m standing on a platform about to perform a bungee jump. He steps off the platform and falls vertically. The tension in the rope increases as it stretches. The boy decelerates to rest at the lowest point of the jump. Assume that air resistance is negligible throughout this question.

Figure 16

not to scale

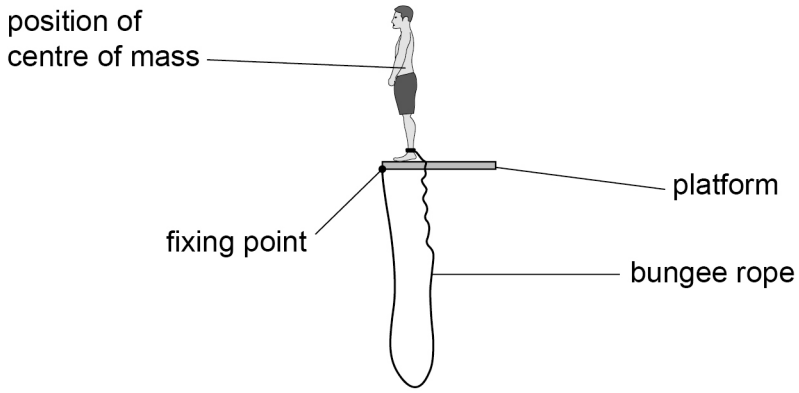

During the jump, s is the vertical displacement moved by the boy's centre of mass. The lowest point of the jump occurs when s is $27\ \mathrm{m}$.

Figure 17 shows the variation of his velocity v with s during the jump.

Figure 17

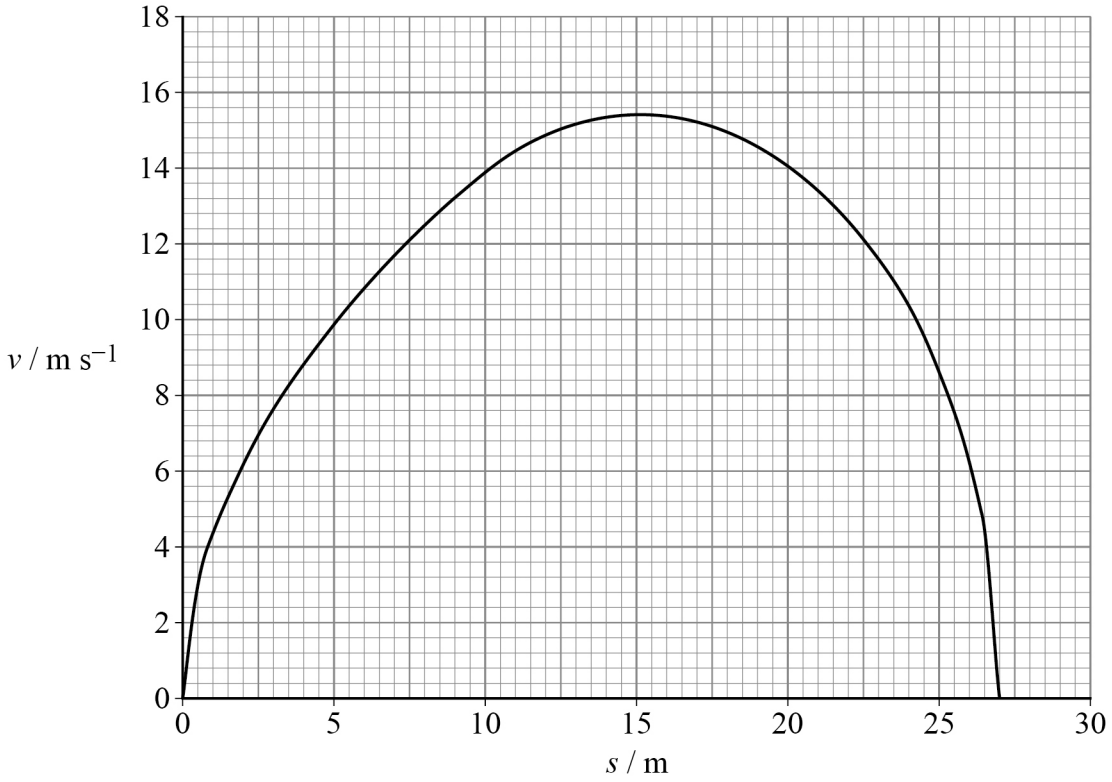

Do not write outside the box

0 6 . 1 The boy experiences freefall when he steps off the platform.

During which part of the jump does the boy's acceleration begin to decrease?

Tick (✓) **one** box.

[1 mark]

between $s = 0$ and $s = 7.5$ m ☐

between $s = 7.5$ m and $s = 15$ m ☐

between $s = 15$ m and $s = 22.5$ m ☐

between $s = 22.5$ m and $s = 27$ m ☐

0 6 . 2 When the boy's centre of mass has moved through a distance s of 15.0 m the change in his gravitational potential energy is 9.56 kJ.

Calculate the mass m of the boy.

[2 marks]

$m =$ _____ kg

Question 6 continues on the next page

Do not write outside the box

The bungee rope has a stiffness k of $110\ \mathrm{N\ m^{-1}}$ and obeys Hooke's law.

0 6 . 3 The maximum kinetic energy of the boy is $7.71\ \mathrm{kJ}$.

Calculate, by considering the energy transfers, the extension ΔL of the bungee rope when the kinetic energy of the boy is at a maximum.

[3 marks]

ΔL = _____ m

0 6 . 4 Deduce the tension in the rope when the kinetic energy of the boy is at a maximum. Give a reason to support your answer.

[2 marks]

tension = _____ N

reason _____

_____

_____

Do not write outside the box

The original rope is replaced with a second rope and the boy repeats the jump.

Table 1 contains information about the original rope and the second rope. Both ropes obey Hooke's law.

Table 1

	Young modulus	Cross-sectional area	Unstretched length
original rope	E	A	L
second rope	$1.2E$	A	$1.2L$

The Young modulus is given by:

$$\text{Young modulus} = \frac{\text{stiffness} \times \text{unstretched length}}{\text{cross-sectional area}}$$

0 6 . 5 Show that each rope has the same stiffness.

[1 mark]

0 6 . 6 Deduce whether the boy's maximum velocity is increased when using the second rope.

[3 marks]

12

END OF QUESTIONS

Do not write outside the box

There are no questions printed on this page

DO NOT WRITE ON THIS PAGE
ANSWER IN THE SPACES PROVIDED

Do not write outside the box

Question number	**Additional page, if required.** **Write the question numbers in the left-hand margin.**

Do not write outside the box

Question number	**Additional page, if required.** **Write the question numbers in the left-hand margin.**

Copyright information

For confidentiality purposes, all acknowledgements of third-party copyright material are published in a separate booklet. This booklet is published after each live examination series and is available for free download from www.aqa.org.uk

Permission to reproduce all copyright material has been applied for. In some cases, efforts to contact copyright-holders may have been unsuccessful and AQA will be happy to rectify any omissions of acknowledgements. If you have any queries please contact the Copyright Team.

Copyright © 2024 AQA and its licensors. All rights reserved.