AQA

Please write clearly in block capitals.

Centre number | | | | | |  Candidate number | | | | |

Surname _____

Forename(s) _____

Candidate signature _____
I declare this is my own work.

# GCSE MATHEMATICS

# F

## Foundation Tier  Paper 1 Non-Calculator

Wednesday 6 November 2024 Morning Time allowed: 1 hour 30 minutes

**Materials**

For this paper you must have:
- mathematical instruments
- the Formulae Sheet (enclosed).

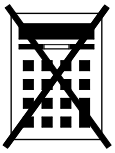

You must **not** use a calculator.

**Instructions**
- Use black ink or black ball-point pen. Draw diagrams in pencil.
- Fill in the boxes at the top of this page.
- Answer **all** questions.
- You must answer the questions in the spaces provided. Do not write outside the box around each page or on blank pages.
- If you need extra space for your answer(s), use the lined pages at the end of this book. Write the question number against your answer(s).
- Do all rough work in this book. Cross through any work you do not want to be marked.

**Information**
- The marks for questions are shown in brackets.
- The maximum mark for this paper is 80.
- You may ask for more answer paper, graph paper and tracing paper. These must be tagged securely to this answer book.

**Advice**

In all calculations, show clearly how you work out your answer.

| For Examiner's Use | |
|---|---|
| Pages | Mark |
| 2–3 | |
| 4–5 | |
| 6–7 | |
| 8–9 | |
| 10–11 | |
| 12–13 | |
| 14–15 | |
| 16–17 | |
| 18–19 | |
| 20–21 | |
| **TOTAL** | |

Do not write outside the box

Answer **all** questions in the spaces provided.

**1 (a)** Write down the value of $\sqrt{49}$

**[1 mark]**

Answer _____

**1 (b)** Work out the value of $3^3$

**[1 mark]**

Answer _____

**1 (c)** Write 10 000 as a power of 10

**[1 mark]**

Answer _____

**2** 1 pound = 16 ounces

Work out the number of ounces in 3 pounds.

**[2 marks]**

Answer _____ ounces

Do not write outside the box

**3 (a)** Write $\frac{3}{2}$ as a mixed number.

**[1 mark]**

Answer _____

**3 (b)** Work out $\frac{1}{5} + \frac{1}{5}$

**[1 mark]**

Answer _____

**4 (a)** Write down **all** the factors of 20

**[2 marks]**

Answer _____

**4 (b)** Mica says,

"When two multiples of 5 are added, the answer is always a multiple of 10"

Give **one** example to show that he is wrong.

**[1 mark]**

10

**Turn over ►**

Do not write outside the box

**5** Put these values in order of size, starting with the smallest.

80% 0.7 $\frac{3}{4}$

**[2 marks]**

Answer _____ _____ _____

**6** Sally buys two hats and three scarves.

The **total** cost is £28.50

Each hat costs £4.50

Work out the cost of each scarf.

**[4 marks]**

Answer £ _____

Do not write outside the box

**7** 120 people visit a maze.

80 are children, the rest are adults.

At the start of the maze you can turn left or right.

45 children turn left.

75 people in total turn left.

**7 (a)** Complete the frequency tree.

**[4 marks]**

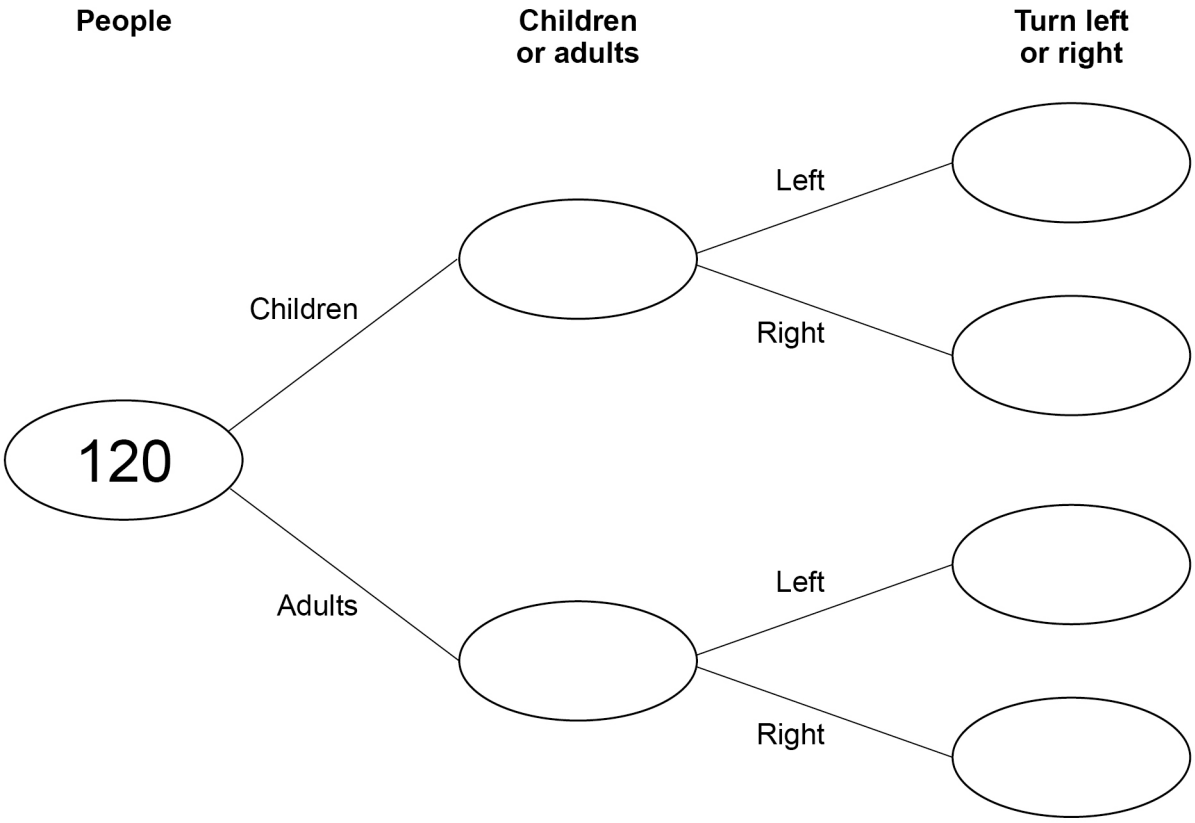


**7 (b)** What fraction of the **children** turn left?

Give your answer in its simplest form.

**[2 marks]**

Answer _____

12

**Turn over ►**

Do not write outside the box

**8** The table shows information about where students prefer to revise.

| Library | Home | In class |
|---|---|---|
| 30 | 68 | 37 |

Ed draws this bar chart to represent the data.

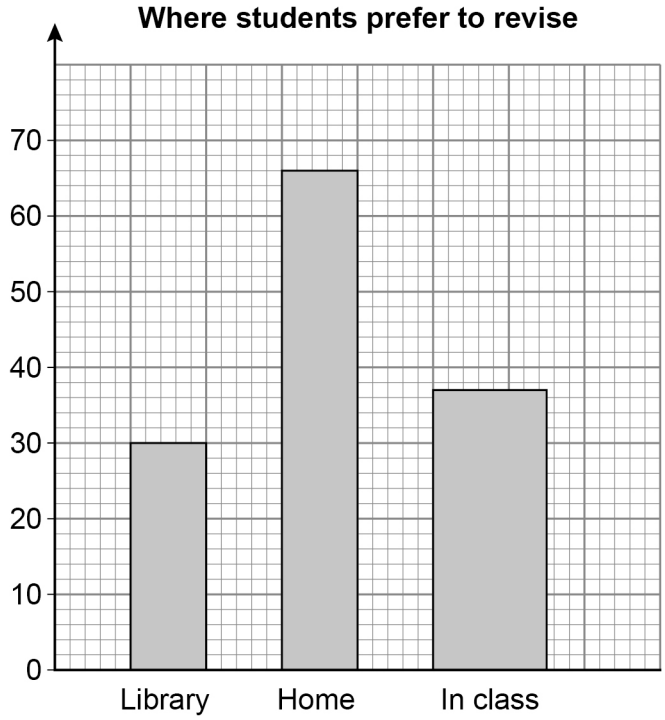


Write down **three** mistakes he has made.

**[3 marks]**

Mistake 1 _____

_____

Mistake 2 _____

_____

Mistake 3 _____

_____

Do not write outside the box

**9** A number is picked at random from the first three positive odd numbers.

A number is picked at random from the first four prime numbers.

The two numbers are **multiplied** to get a score.

**9 (a)** Complete the table.

**[4 marks]**

prime

| × | **2** | **3** | | **7** |
|---|---|---|---|---|
| **1** | | | | |
| | | | | |
| **5** | | 15 | | |

odd

**9 (b)** What is the probability that the score is a square number?

Give your answer as a fraction.

**[2 marks]**

Answer _____

9

**Turn over ►**

Do not write outside the box

**10 (a)** Simplify fully $8m + 4 - 2m + 7$

**[2 marks]**

Answer _____

**10 (b)** Simplify fully $\frac{1}{2}c \times 6d$

**[2 marks]**

Answer _____

Do not write outside the box

**11**

The multipack costs 10% **less than** 6 single bags.

Work out the cost of the multipack.

**[4 marks]**

Answer £ _____

8

**Turn over ►**

Do not write outside the box

**12** Write the ratio 6 : 2 in the form $n$ : 1

**[1 mark]**

Answer _____ : 1

**13** $x$ and $y$ are two **different positive** numbers.

For each statement, tick the correct box.

**[2 marks]**

| | **Always true** | **Sometimes true** | **Never true** |
|---|---|---|---|
| $x + y$ is positive | ☐ | ☐ | ☐ |
| $x - y$ is negative | ☐ | ☐ | ☐ |

Do not write outside the box

**14 (a)** On the grid, draw a shape **congruent** to triangle A.

**[1 mark]**

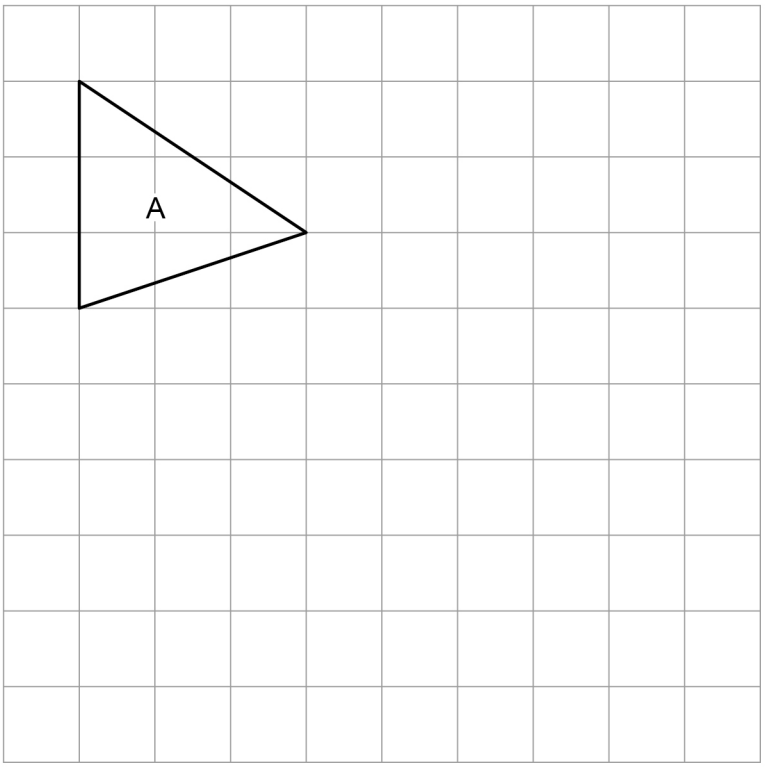


**14 (b)** On the grid, **enlarge** shape B by scale factor $\frac{1}{3}$

**[2 marks]**

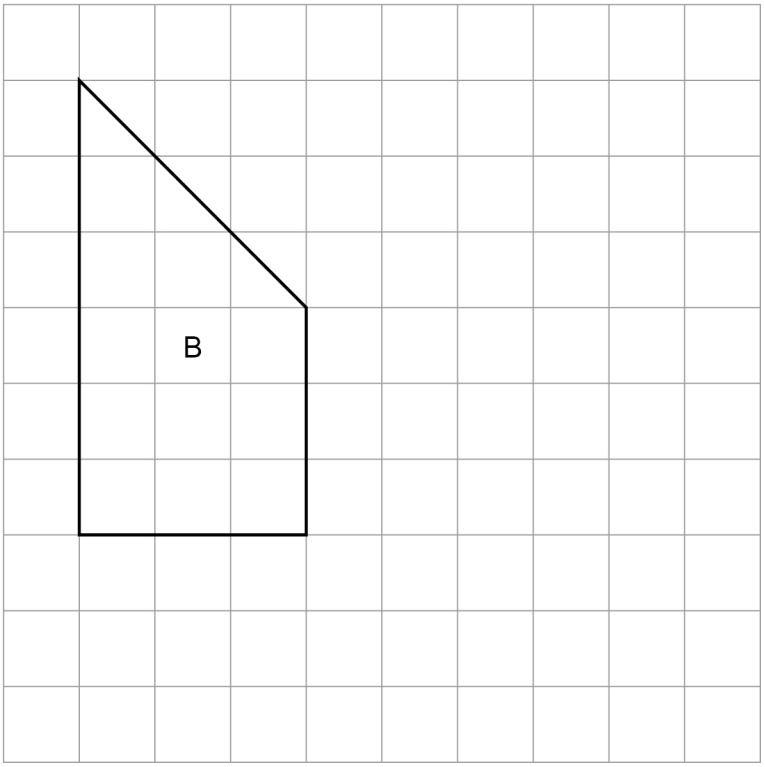


6

**Turn over ►**

Do not write outside the box

**15** 35 books are either for adults or for children.

number for adults : number for children = 6 : 1

How many **more** books are for adults than for children?

**[3 marks]**

Answer _____

Do not write outside the box

**16** This shape is made from a semicircle and a square.

Not drawn accurately

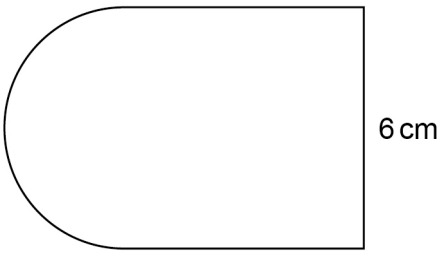


On the centimetre grid below, make an accurate drawing of the shape.

**[2 marks]**

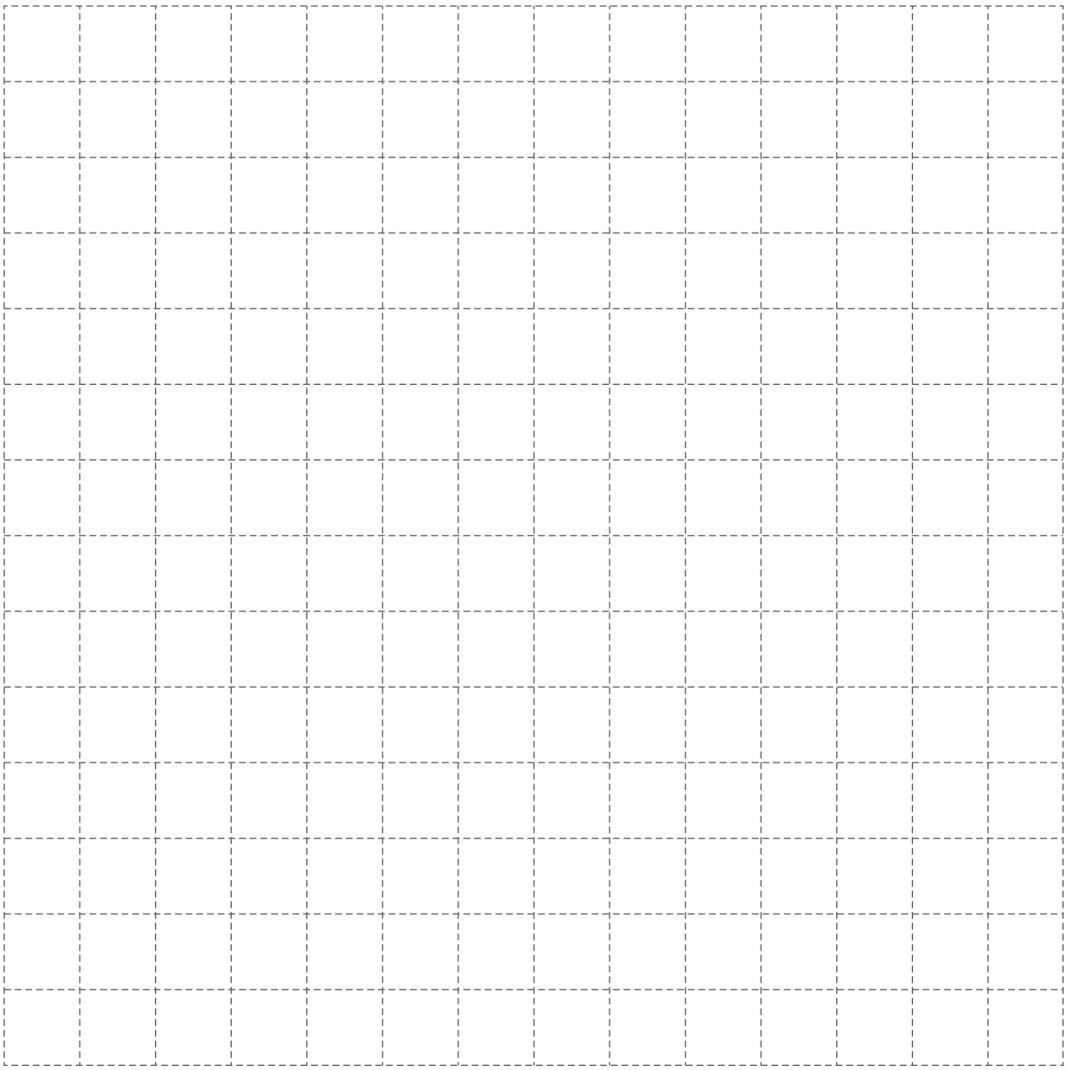

5

**Turn over ►**

Do not write outside the box

**17** A car travels 4 miles in 5 minutes.

Work out the average speed in miles per hour.

**[3 marks]**

Answer _____ mph

Do not write outside the box

**18** $J$ (0, 12) and $K$ (5, 10) are points on the straight line $JKLM$.

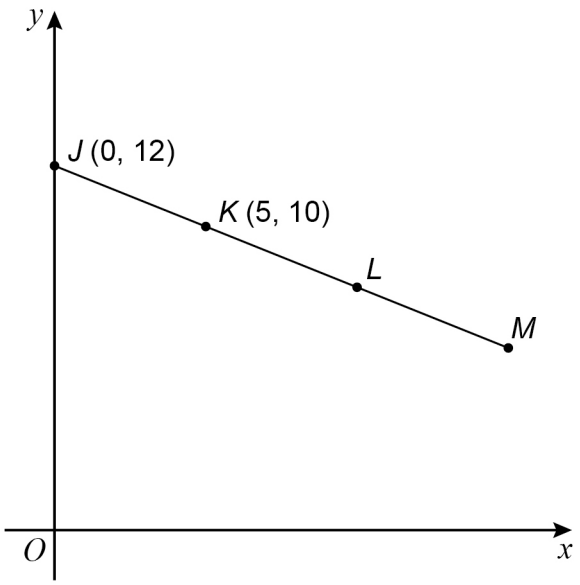


Not drawn accurately

$JK = KL = LM$

Work out the coordinates of $M$.

**[3 marks]**

Answer ( _____ , _____ )

6

**Turn over ►**

Do not write outside the box

**19** Work out the value of $1.5^2$

**[2 marks]**

Answer _____

**20 (a)** Complete this number machine so that $y = 4x + 5$

**[1 mark]**

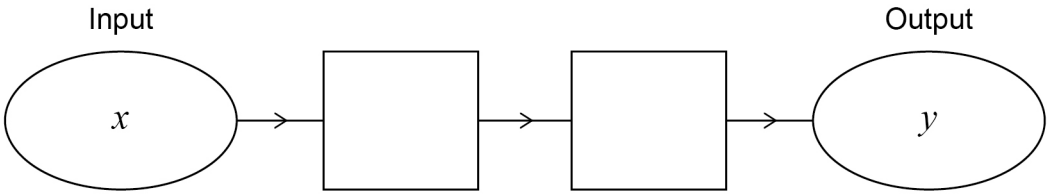


**20 (b)** Complete this number machine so that $y = 3x - 24$

**[1 mark]**

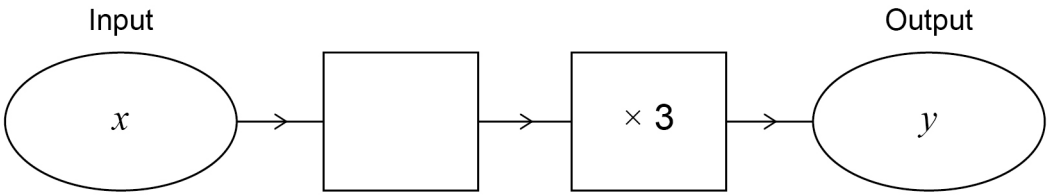


**20 (c)** Complete this number machine so that $y = x$

**[1 mark]**

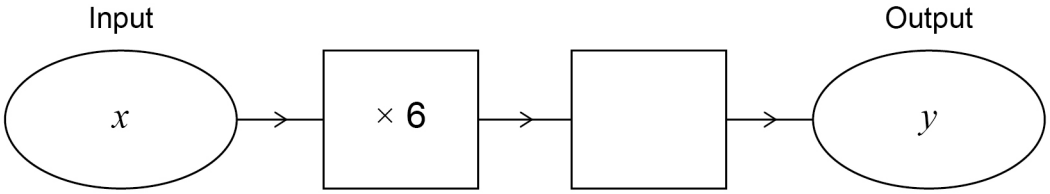

Do not write outside the box

**21** Each number in a list is increased by 10

Tick **one** box for each statement.

**[3 marks]**

| | True | False | Cannot tell |
|---|---|---|---|
| The mode is increased by 10 | ☐ | ☐ | ☐ |
| The median is increased by 10 | ☐ | ☐ | ☐ |
| The range is increased by 10 | ☐ | ☐ | ☐ |

**22 (a)** Write the missing term in the geometric progression.

**[1 mark]**

1 4 16 _____ 256

**22 (b)** A Fibonacci-type sequence begins

5 –9

The sequence is continued by adding the previous two terms.

Work out the next **two** terms.

**[2 marks]**

_____

_____

Answer _____ and _____

11

**Turn over ►**

Do not write outside the box

**23** Here is a solid prism.

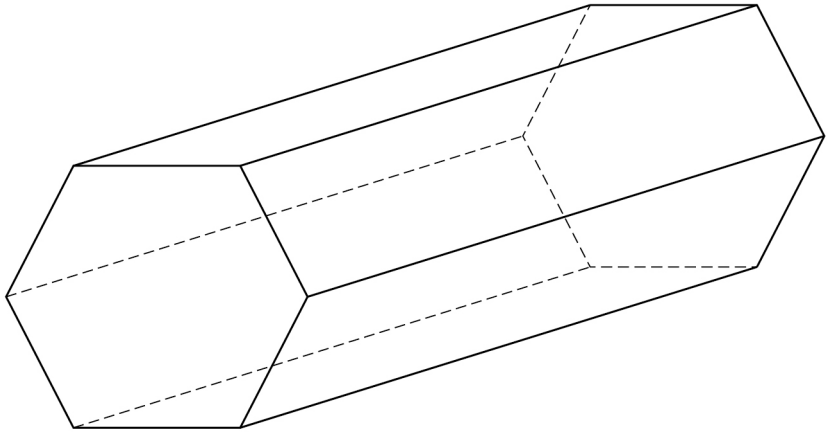

**23 (a)** How many faces does the prism have?

**[1 mark]**

Answer _____

**23 (b)** The prism has

volume = 3500 $cm^3$

and

length = 20 cm

Work out the area of the cross-section of the prism.

**[2 marks]**

_____

_____

_____

_____

Answer _____ $cm^2$

Do not write outside the box

**24** Work out $1\frac{1}{5} - \frac{3}{10}$

Give your answer as a fraction.

**[2 marks]**

Answer _____

**25** Write down the value of sin 90°

**[1 mark]**

Answer _____

**Turn over for the next question**

6

Do not write outside the box

**26** A large circle and a small circle are shown.

The radius of the large circle is 12 cm

radius of large circle : radius of small circle = 4 : 1

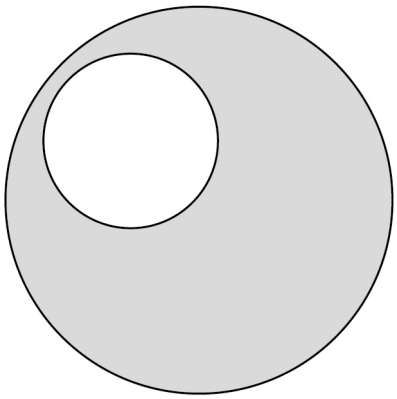

Not drawn accurately

Work out the shaded area.

Give your answer in terms of $\pi$

**[4 marks]**

Answer _____ $cm^2$

Do not write outside the box

**27 (a)** In this part, assume that each person works at the same rate.

10 people can complete a job in 9 hours.

If 15 people work on the same job, how many hours will it take to complete the job?

**[2 marks]**

Answer _____ hours

**27 (b)** In fact, of the 15 people

6 work at a slower rate

9 work at a faster rate.

What does this mean about the number of hours it will take to complete the job?

Tick **one** box.

**[1 mark]**

☐ It is greater than the answer to (a)

☐ It is the same as the answer to (a)

☐ It is less than the answer to (a)

☐ It is not possible to say

**END OF QUESTIONS**

7

Do not write outside the box

**There are no questions printed on this page**

**DO NOT WRITE ON THIS PAGE**
**ANSWER IN THE SPACES PROVIDED**

*Do not write outside the box*

| Question number | **Additional page, if required.**<br>**Write the question numbers in the left-hand margin.** |
|---|---|
| | |

*Do not write outside the box*

| Question number | **Additional page, if required.**<br>**Write the question numbers in the left-hand margin.** |
|---|---|
| | |

**Copyright information**

For confidentiality purposes, all acknowledgements of third-party copyright material are published in a separate booklet. This booklet is published after each live examination series and is available for free download from www.aqa.org.uk.

Permission to reproduce all copyright material has been applied for. In some cases, efforts to contact copyright-holders may have been unsuccessful and AQA will be happy to rectify any omissions of acknowledgements. If you have any queries please contact the Copyright Team.

Copyright © 2024 AQA and its licensors. All rights reserved.